031631

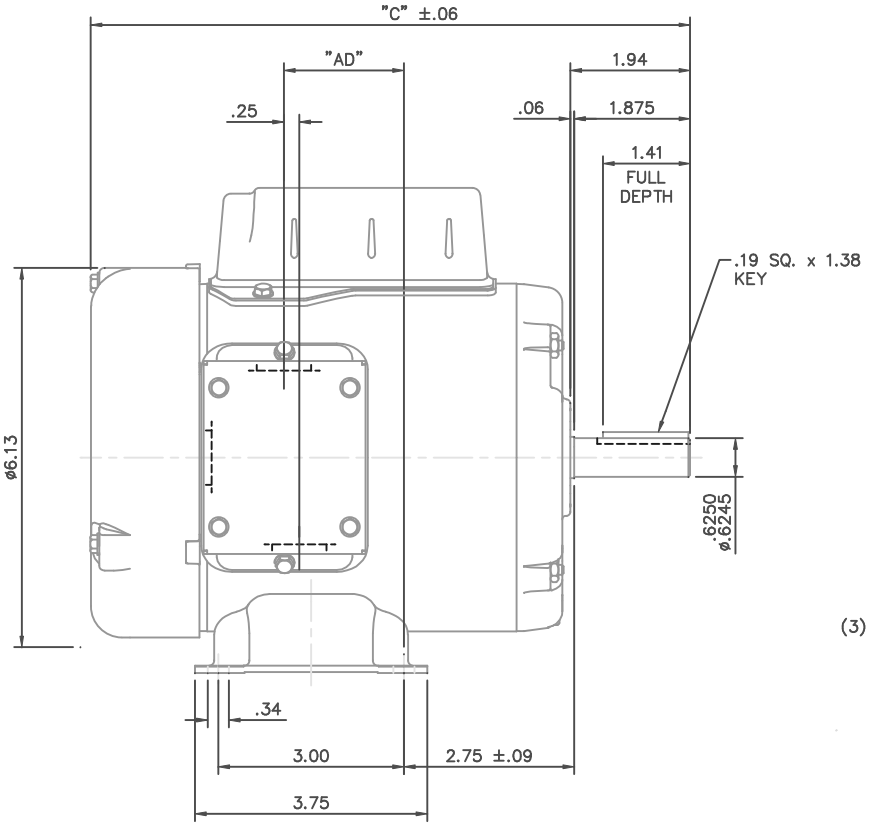

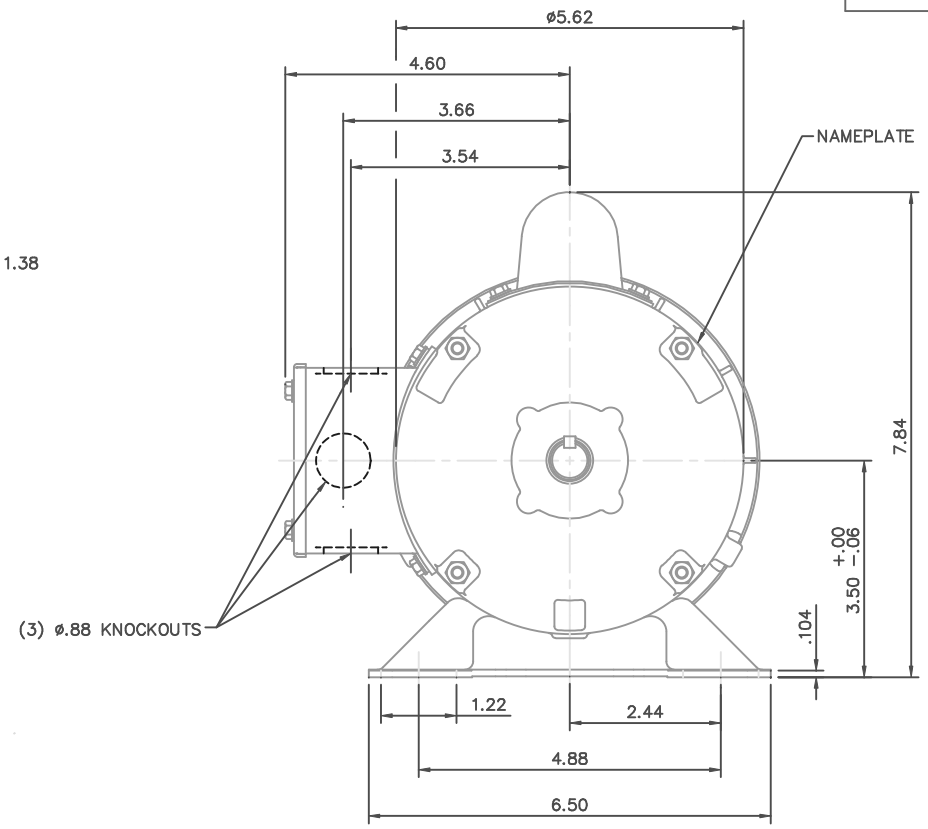

DASH NO.	"C"	"AD"
500	9.69	1.94
525	9.94	2.19
550	10.19	2.44
575	10.44	2.69
600	10.69	2.94
625	10.94	3.19
650	11.19	3.44
675	11.44	3.69

GASKETS THROUGHOUT

NO.	REVISION	BY & DATE	CH'K'D.

THIS DRAWING IN DESIGN AND DETAIL IS OUR PROPERTY AND MUST NOT BE USED EXCEPT IN CONNECTION WITH OUR WORK ALL RIGHTS OF DESIGN AND INVENTION ARE RESERVED
THIS IS AN ELECTRONICALLY GENERATED DOCUMENT – DO NOT SCALE THIS PRINT

TOLERANCES UNLESS OTHERWISE SPECIFIED

	DEC.	INCHES	METRIC
	.X	±.1	±2.5
	.XX	±.03	±.76
	.XXX	±.005	±.127
	.XXXX	±.0005	±.0127
	FRACTIONS	±1/64	
	ANGLES	±1/2°	

LEESON ELECTRIC CORPORATION

DRAWN	PG 5/30/01	TITLE	OUTLINE – S56 FRAME RIGID MOUNT – TEFC
APPR.			
R.F.P.		MAT'L.	1 PHASE
SCALE	1=2		
REF.	030391	FINISH	
FMF	101078	REV.	
		DRAWING NO.	031631

9/26/2008 1:06:54 PM