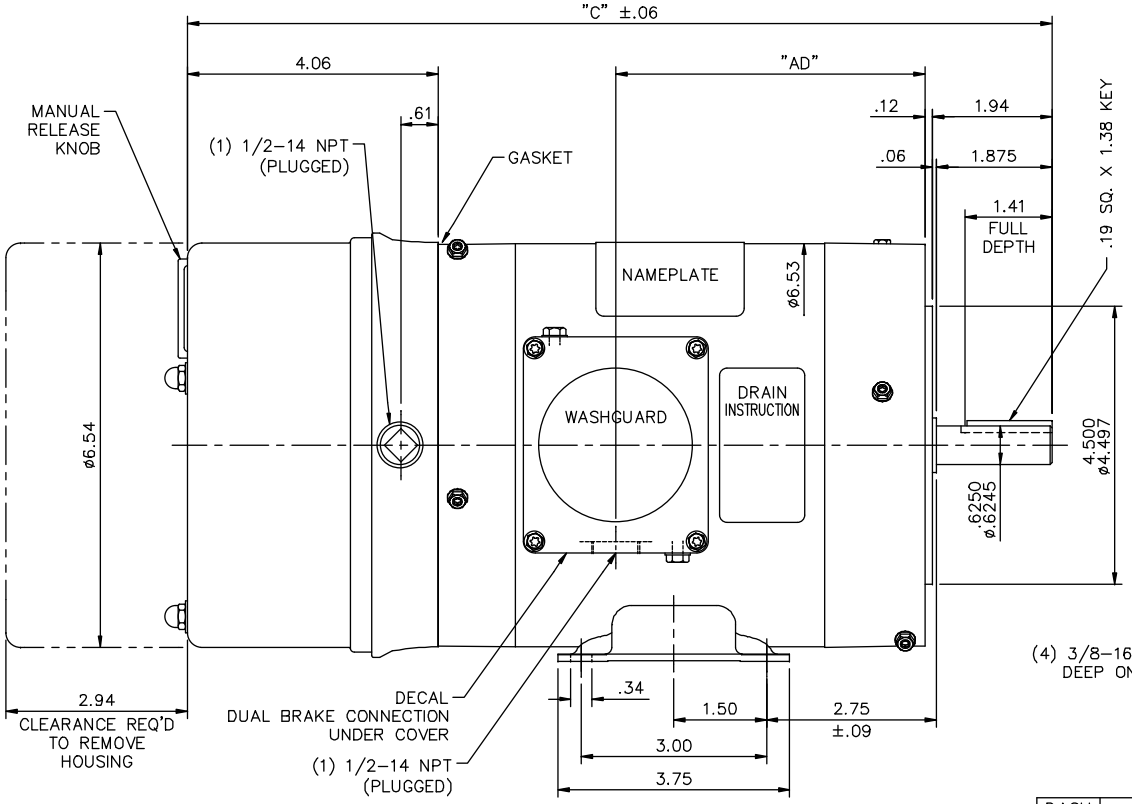

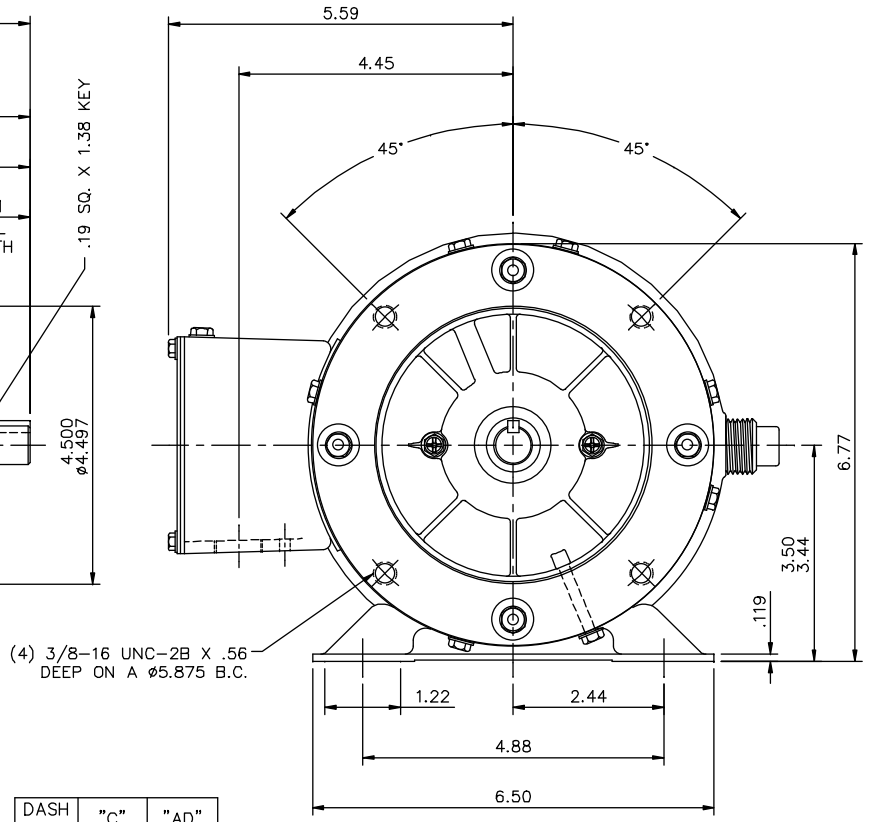

DASH NO.	"C"	"AD"
500	14.00	5.01
550	14.50	5.51
600	15.00	6.01
650	15.50	6.51

MAXIMUM FACE RUNOUT TO BE .004 TIR
MAXIMUM PILOT ECCENTRICITY .004 TIR
PERMISSIBLE SHAFT RUNOUT .002 TIR

WASHGUARD FEATURES:

1) SHAFT SEAL & V–RING
2) DRAIN HOLES IN ENDBELLS & CONDUIT BOX
3) STAINLESS STEEL SHAFT, HARDWARE & NAMEPLATE
4) GASKETS THROUGHOUT

NO.	REVISION	BY & DATE	CHK
02	ADDED DRAIN HOLE SCREWS PER ECR–0034519	ARV 7/30/13	SK
01	REV'D DRAIN HOLE SCREW LOC'NS IN L.E ENDBELL TO	BJB 03/18/04	
	MATCH ENDBELL MACHINING		

TOLERANCES UNLESS SPECIFIED

DEC.	INCHES
.X	±.1
.XX	±.03
.XXX	±.005
.XXXX	±.0005
ANG	±1/2°

LEESON — ELECTRIC MOTORS GEARMOTORS AND DRIVES

TITLE: OUTLINE–56C FRAME TENV– RIGID "C"

MAT'L.: WASHGUARD BRAKE MOTOR

FINISH

CAD FILE: 028575

RFP

DIST

DRAWN	LST 1/14/04
CHK	RW 1/15/04
APPD	KH 1/15/04
SCALE	1=2
REF	
FMF	116466
PREV	

SIZE: B — DRAWING NO.: 028575 — REV.: 02