035655LN

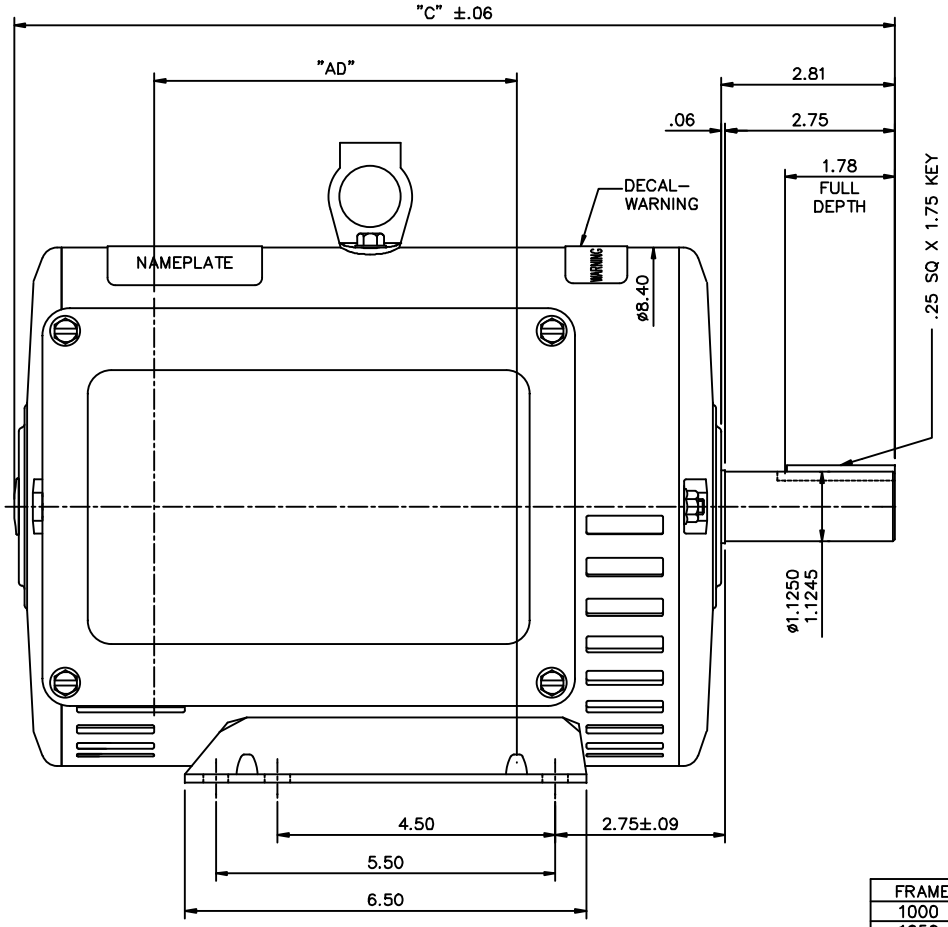

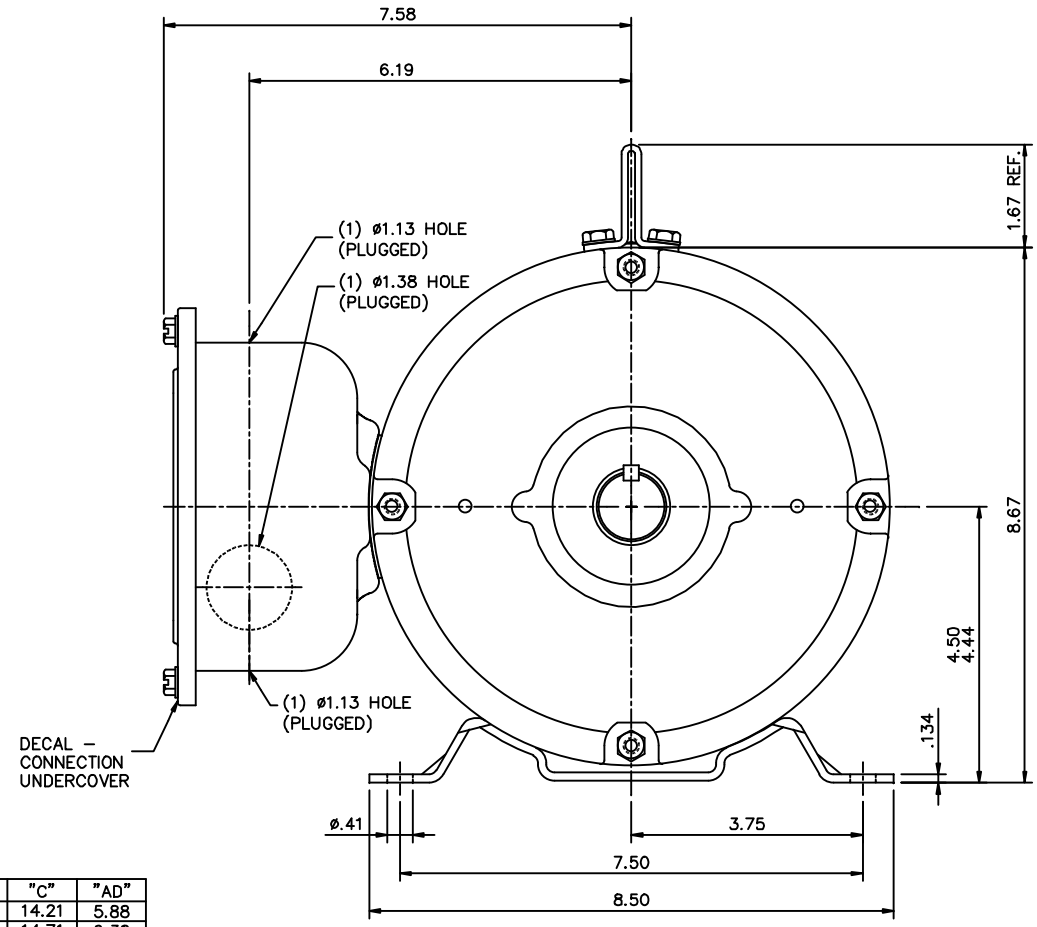

FRAME	"C"	"AD"
1000	14.21	5.88
1050	14.71	6.38
1100	15.21	6.88
1150	15.71	7.38
1200	16.21	7.88
1250	16.71	8.38

GASKETS THROUGHOUT

NO.	REVISION	BY & DATE	CHK
01	C FACE SPEC REMOVED AS PER ECN# 23716	JD 03/26/2012	

TOLERANCES UNLESS SPECIFIED

DEC.	INCHES
.X	±.1
.XX	±.03
.XXX	±.005
.XXXX	±.0005
ANG	±1/2°

Lincoln MOTORS

TITLE: OUTLINE– 180T FRAME DRIP PROOF– RIGID

MAT'L.

FINISH

RFP

DIST

CAD FILE: 035655LN

DRAWN	AK 12/27/11
CHK	JD 12/27/11
APPD	
SCALE	1=1
REF	
FMF	LM24682
PREV	

SIZE: B

DRAWING NO.: 035655LN

REV.: 01