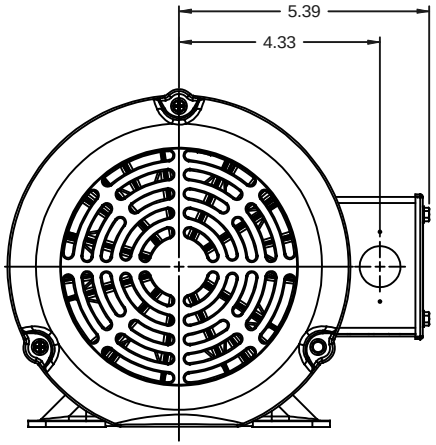

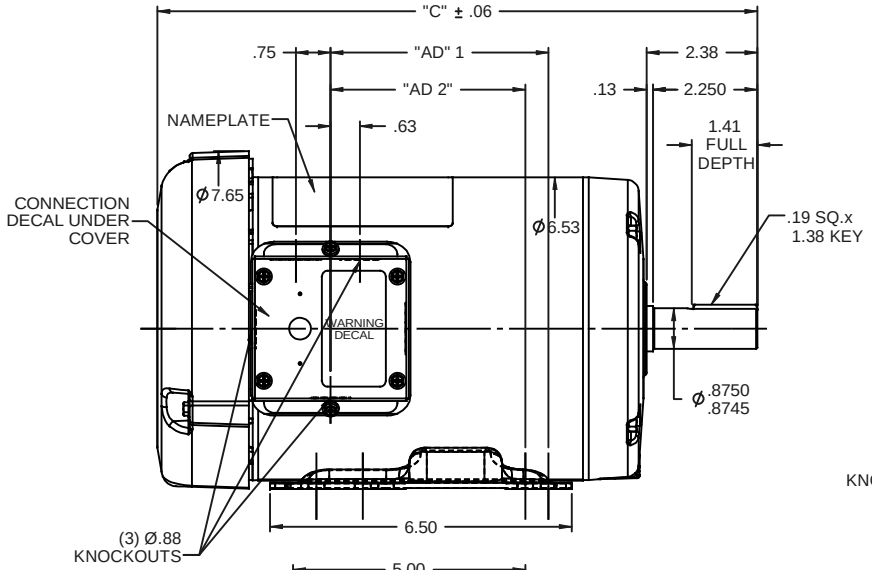

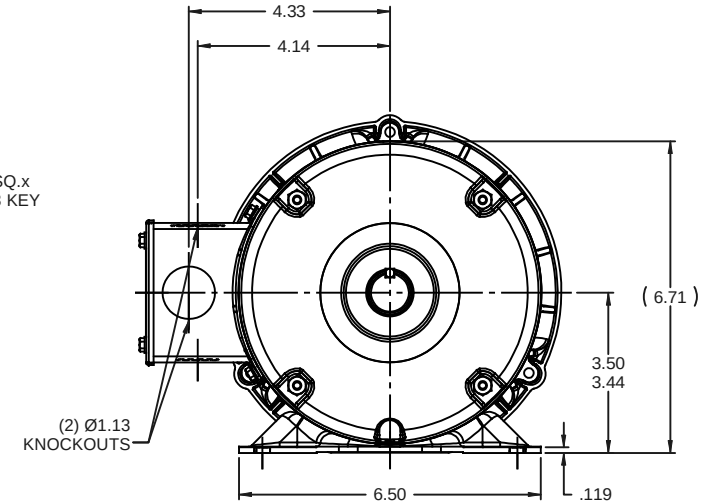

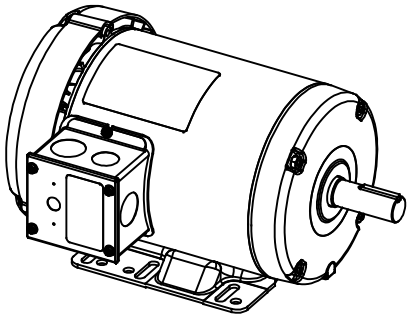

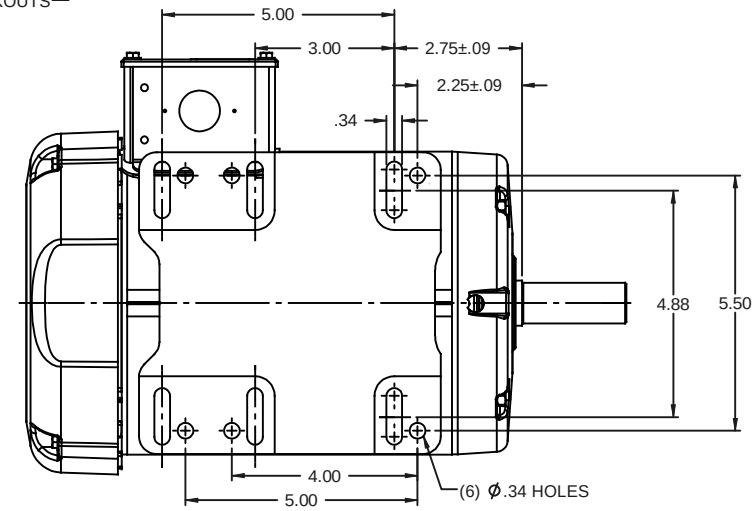

NOTE:
1) GASKETS THROUGHOUT

DASH NO.	"C"	"AD 1"	"AD 2"
600	11.93	3.69	3.19
650	12.43	4.19	3.69
675	12.68	4.44	3.94
700	12.93	4.69	4.19
750	13.43	5.19	4.69
800	13.93	5.69	5.19
850	14.43	6.19	5.69

RBC PROPRIETARY AND CONFIDENTIAL INFORMATION
This document is the property of REGAL BELOIT CORPORATION ("RBC") including its subsidiaries and divisions and contains proprietary information of RBC. This document is loaned on the express condition that neither it nor the information contained therein shall be disclosed to others without the express written consent of RBC, and that the information shall be used by the recipient only as approved expressly by RBC. This document shall be returned to RBC upon its request. This document may be subject to certain restrictions under U.S. export control laws and regulations.

NO	REVISION	BY & DATE	CHK

TOLERANCES UNLESS SPECIFIED

DEC	INCHES
.X	±.1
.XX	±.03
.XXX	±.005
.XXXX	±.0005
ANG	±1/2°

THIRD ANGLE PROJECTION

LEESON — ELECTRIC MOTORS GEARMOTORS AND DRIVES

TITLE OUTLINE - 140T/56HZ FRAME
TEFC - RIGID

MAT'L
FINISH GENERAL PURPOSE

RFP
PREV
NETWORK FILE NAME

SIZE B
DRAWING NO 028873
REV

DRAWN KA 08/27/2008
CHK RVD 08/27/2008
APPR
SCALE 3:8
REF 028765
FMF 120944
PAGE OF

8/27/2008 9:02:14 AM