RBC PROPRIETARY AND CONFIDENTIAL INFORMATION
This document is the property of REGAL BELOIT CORPORATION ("RBC") including its subsidiaries and divisions and contains proprietary information of RBC. This document is loaned on the express condition that neither it nor the information contained therein shall be disclosed to others without the express written consent of RBC, and that the information shall be used by the recipient only as approved expressly by RBC. This document shall be returned to RBC upon its request. This document may be subject to certain restrictions under U.S. export control laws and regulations.

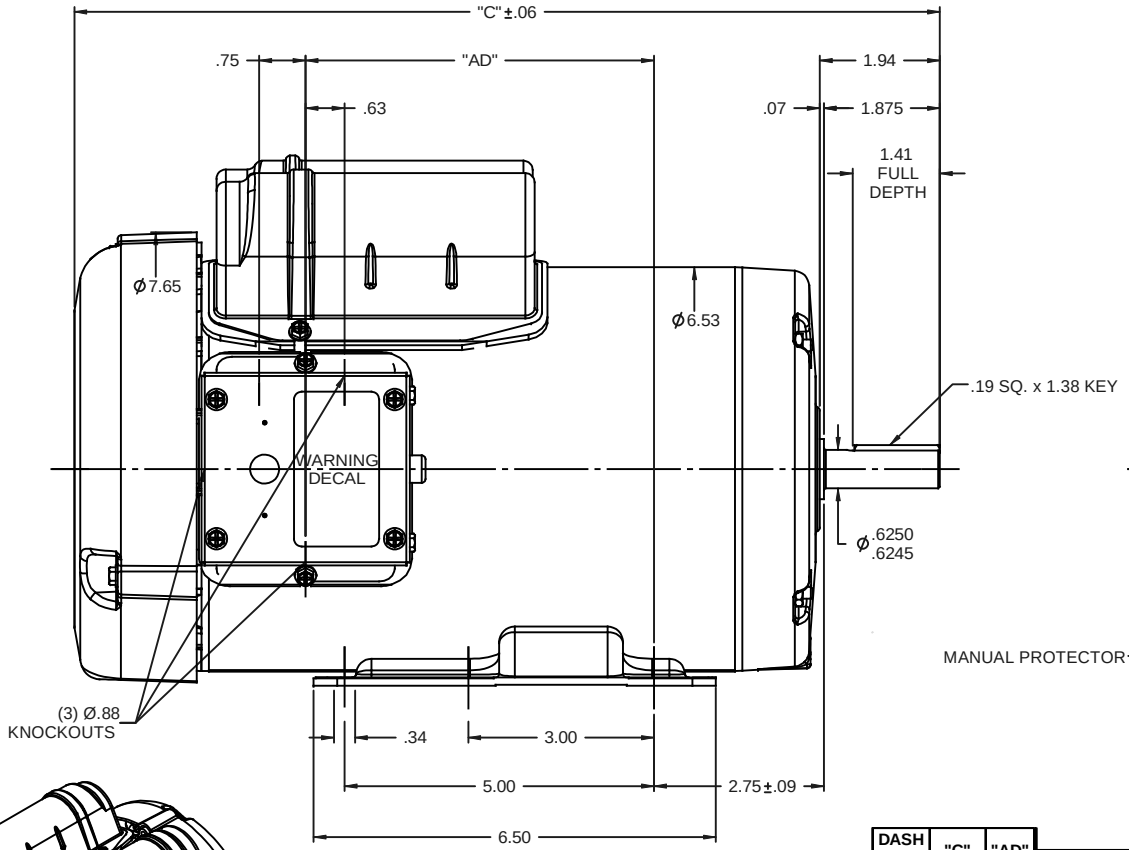

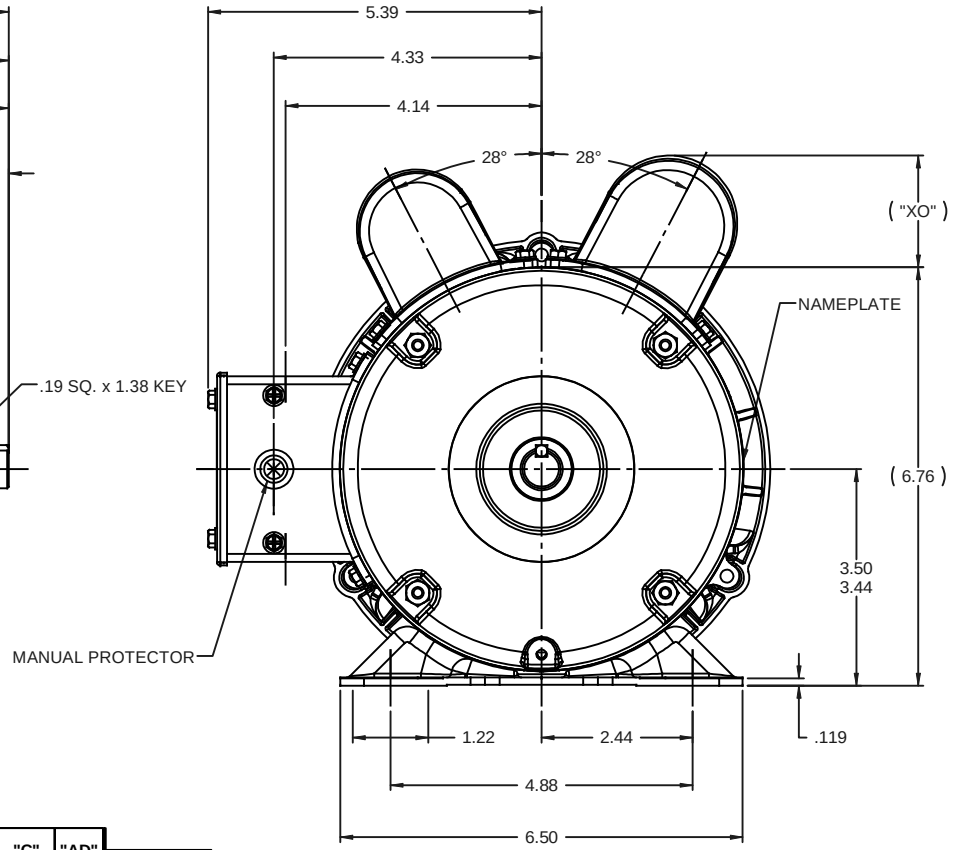

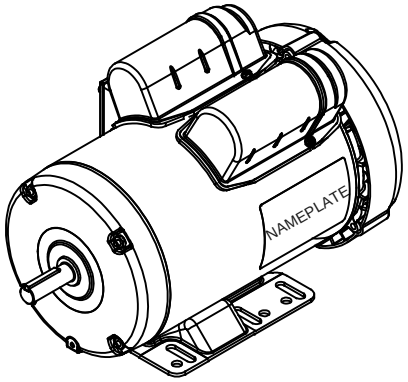

DASH NO.	"C"	"AD"
700	12.49	4.13
750	12.99	4.63
800	13.49	5.13
850	13.99	5.63

CAP DASH	"XO"
A	1.15
B	1.60
C	1.82

NOTES:
1) GASKETS THROUGHOUT.

TOLERANCES UNLESS SPECIFIED		LEESON ELECTRIC MOTORS GEARMOTORS AND DRIVES	DRAWN	GRB 12/01/08
DEC	INCHES		CHK	DJ 12/01/08
.X	±.1		APPR	DJ 12/01/08
.XX	±.03	TITLE OUTLINE - 56H FRAME	SCALE	1:2
.XXX	±.005	TEFC - RIGID	REF	028706
.XXXX	±.0005	MAT'L COMPRESSOR DUTY	FMF	116705.00
ANG	±1/2°	FINISH	PAGE	1 OF 1

NO	REVISION	BY & DATE	CHK

THIRD ANGLE PROJECTION

RFP 12/01/08
NETWORK FILE NAME
PREV
SIZE B
DRAWING NO 028908
REV

12/2/2008 7:51:47 AM