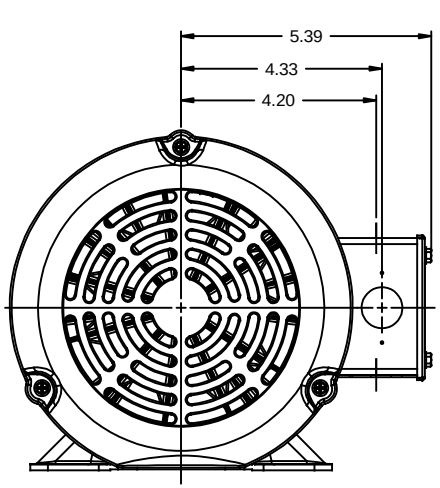

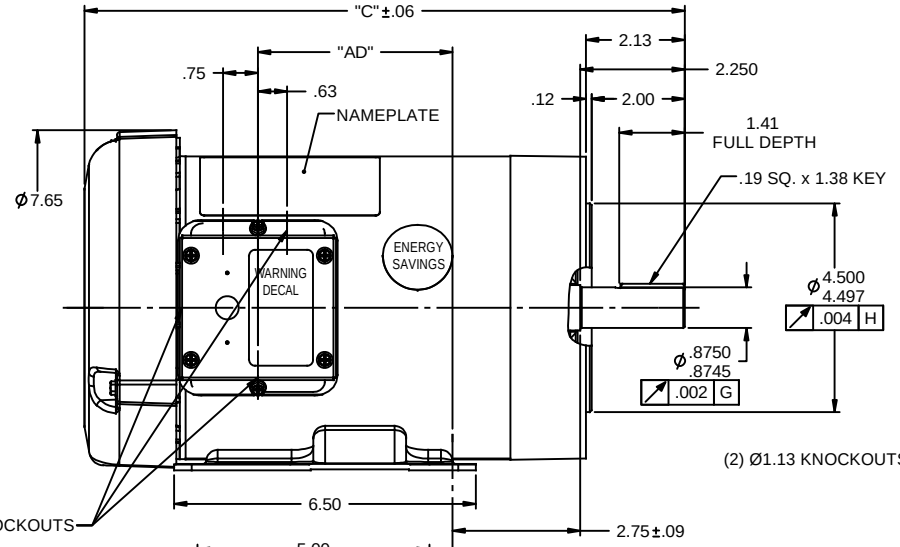

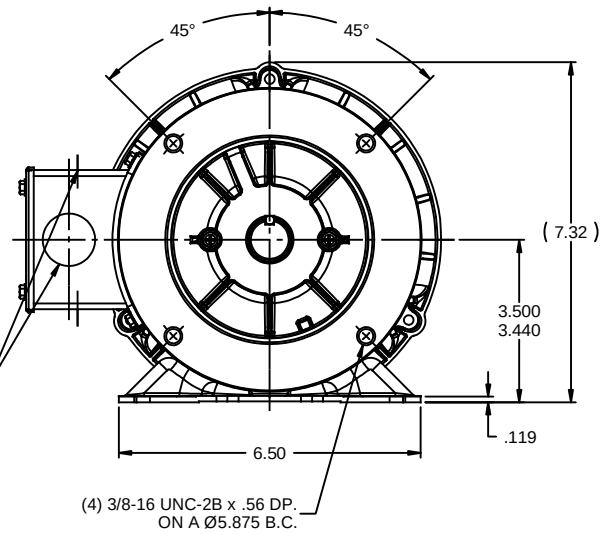

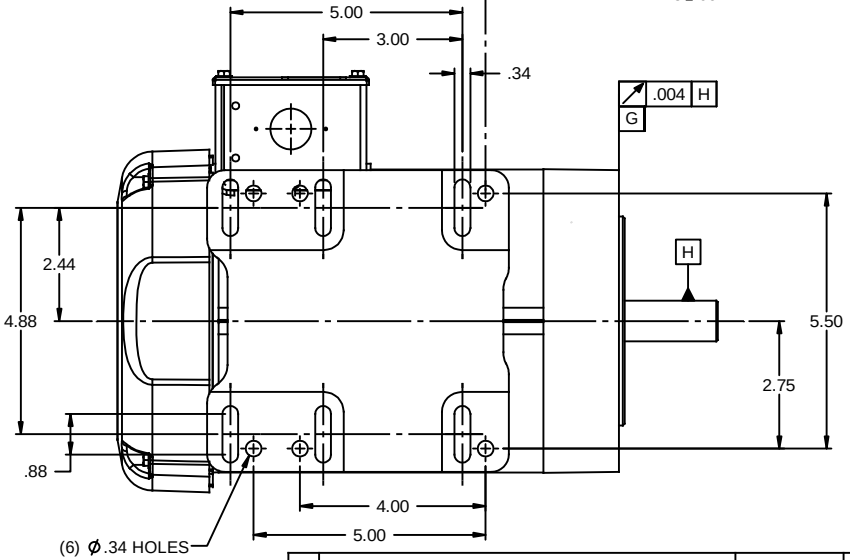

NOTE:
1) GASKETS THROUGHOUT

DASH NO.	"C"	"AD"
600	11.92	3.19
650	12.42	3.69
700	12.92	4.19
750	13.42	4.69
800	13.92	5.19

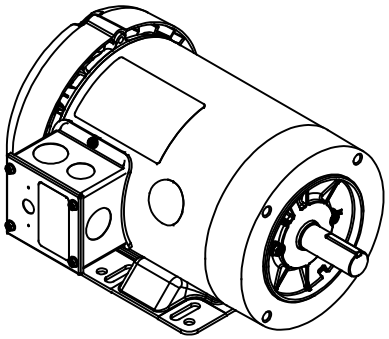

NO	REVISION	BY & DATE	CHK
01	ADDED BOTTOM VIEW	PG 5/19/2010	

TOLERANCES UNLESS SPECIFIED

DEC	INCHES
.X	±.1
.XX	±.03
.XXX	±.005
.XXXX	±.0005
ANG	±1/2°

LEESON ELECTRIC MOTORS GEARMOTORS AND DRIVES

TITLE OUTLINE - 140TC/56HCZ FRAME
TEFC - RIGID "C" FACE

MAT'L
FINISH GENERAL PURPOSE

DRAWN GRB 12/05/08
CHK DJ 12/05/08
APPR DJ 12/05/08
SCALE 3:8
REF 028566
FMF 120485.00
PAGE 1 OF 1

THIRD ANGLE PROJECTION

RFP 12/05/08
NETWORK FILE NAME 028911
PREV
SIZE B
DRAWING NO 028911
REV 01

5/19/2010 4:32:10 PM