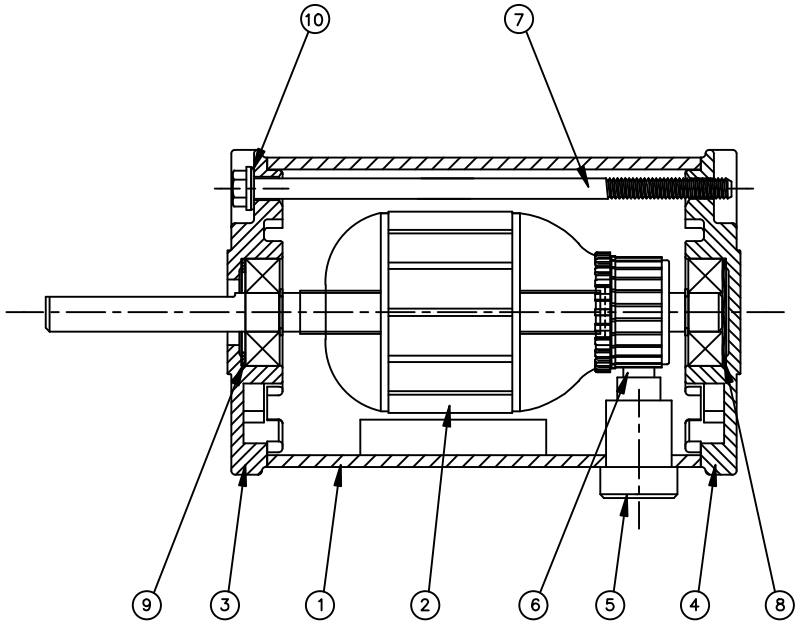

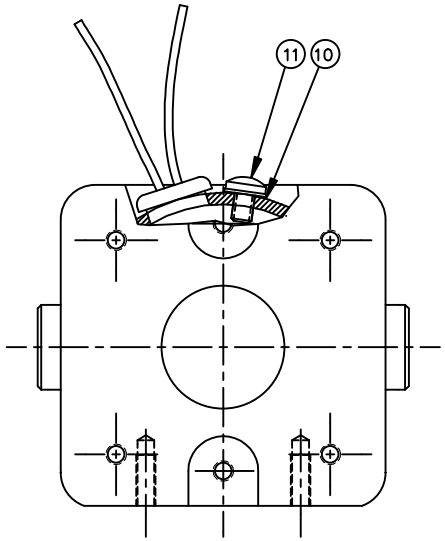

ITEM	DESCRIPTION
11	TFS 8–32 X .25 PP ZP
10	ITLW #8 ZP
9	SHIM WASHER .030
8	WAVY SPRING
7	T–BOLT 8–32
6	BRUSH ASSEMBLY
5	BRUSH CAP
4	ENDBELL MACHINED
3	ENDBELL MACHINED
2	ARMATURE/SHAFT ASSEMBLY
1	FRAME/MAGNET/LEADS ASSY

NO.	REVISION	BY & DATE
01	MOVED STRAIN RELIEF & LEADS TO THE F/M/LEADS	IPG 7/12/2010
	ASSEMBLY, ISAAC 10–1153	

TOLERANCES UNLESS SPECIFIED

DEC.	INCHES
.X	±.1
.XX	±.01
.XXX	±.005
.XXXX	±.0005
ANG	±1/2°

CHK

LEESON

ELECTRIC MOTORS
GEARMOTORS
AND DRIVES

TITLE GENERAL ASSEMBLY
25 FRAME DC

MAT'L.

FINISH

CAD FILE M1041041

RFP

DIST

DRAWN SAD 7/15/03
CHK IPG 7/16/03
APPD
SCALE 1=1
REF PR020584
FMF M1110014.00
PREV

SIZE B
DRAWING NO. M1041041
REV. 01

THIS DRAWING IN DESIGN AND DETAIL IS OUR PROPERTY AND MUST NOT BE USED EXCEPT IN CONNECTION WITH OUR WORK ALL RIGHTS OF DESIGN AND INVENTION ARE RESERVED
THIS IS AN ELECTRONICALLY GENERATED DOCUMENT – DO NOT SCALE THIS PRINT