SS87557LE

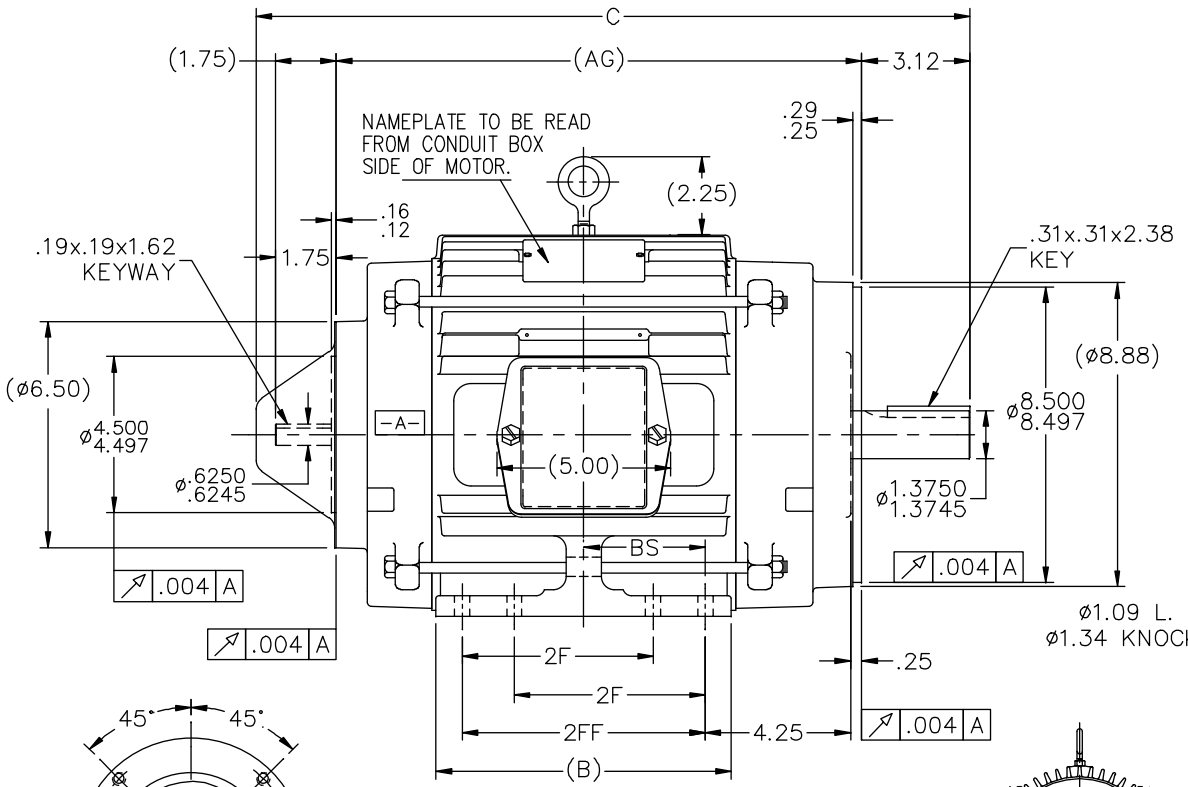

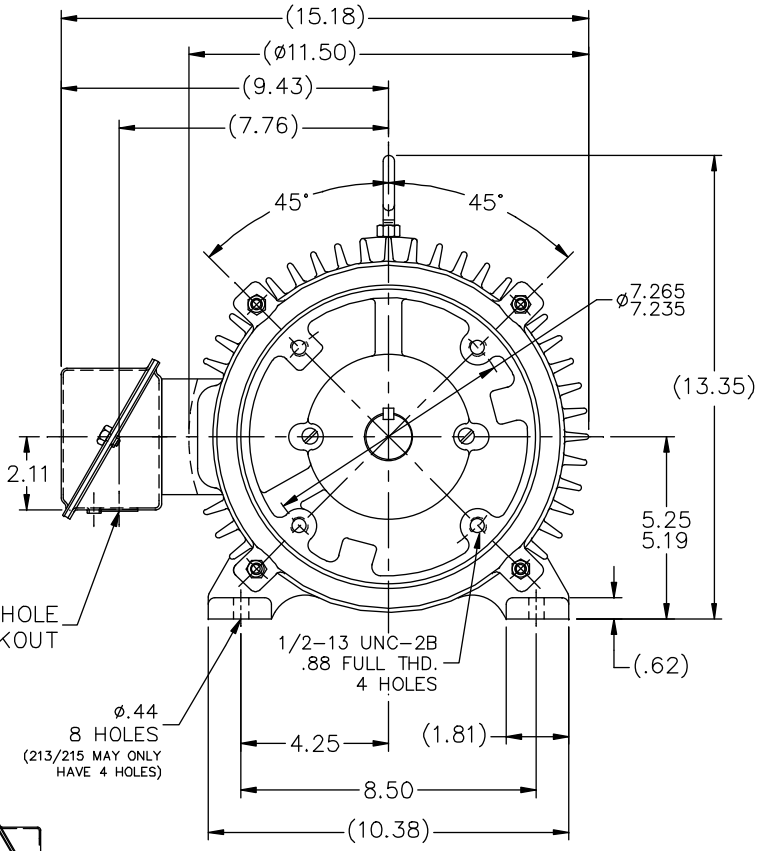

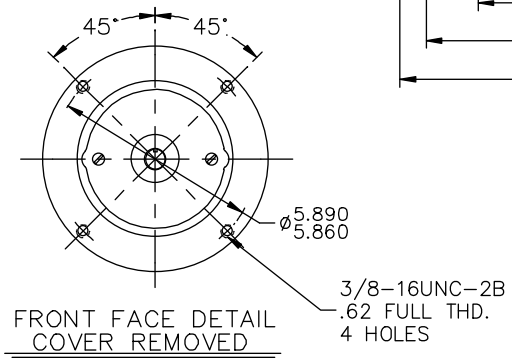

FRONT FACE DETAIL
COVER REMOVED

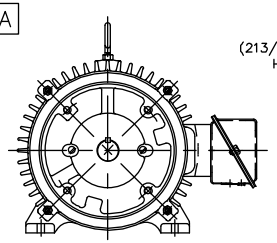

F2 VIEW

NOTES:
1. BOX CAN BE ROTATED IN 90° STEPS.
2. BOX CAN BE MOUNTED ON OPPOSITE SIDE BY REMOVING BRACKETS AND TURNING FRAME 180°.

DASH	FRAME	B	C	AG	2F	2FF	BS	MTG
875	213/5TC	8.50	20.56	15.12	5.50	7.00	3.50	F1/F2
1000	215TC	9.75	21.81	16.37	7.00	8.25	4.12	F1/F2

NO.	REVISION	BY & DATE
2	ADDED F2 VIEW	UD 06/17/13
1	NEW DRAWING CN35134	NJS 05\20\2002

TOLERANCES UNLESS SPECIFIED

DEC.	INCHES
.X	±.1
.XX	±.03
.XXX	±.005
.XXXX	±.0005
ANG	±7'30"

ST TB CHK

LEESON — ELECTRIC MOTORS GEARMOTORS AND DRIVES

TITLE OUTLINE
215TC FR. – TENV – DBL 'C' FACE AND EXT.

MAT'L.
FINISH
CAD FILE SS87557LE

RFP 05-20-2002
DIST LB

DRAWN NJS 05-16-2002
CHK ML 05-20-2002
APPD TB 05-20-2002
SCALE 9=32
REF
FMF
PREV

SIZE B | DRAWING NO. SS87557LE | PAGE OF | REV. 2