SS6366LN

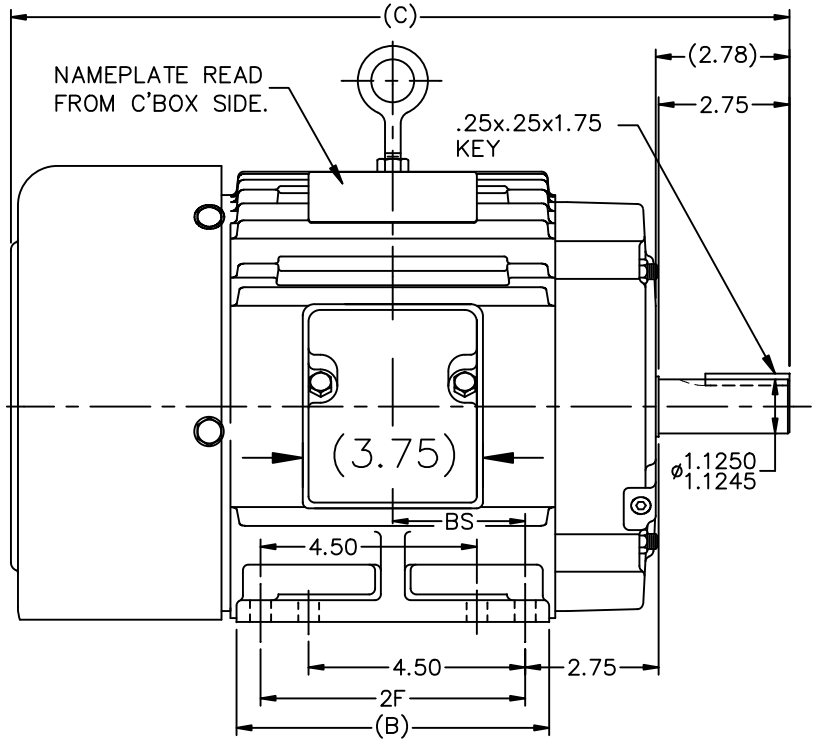

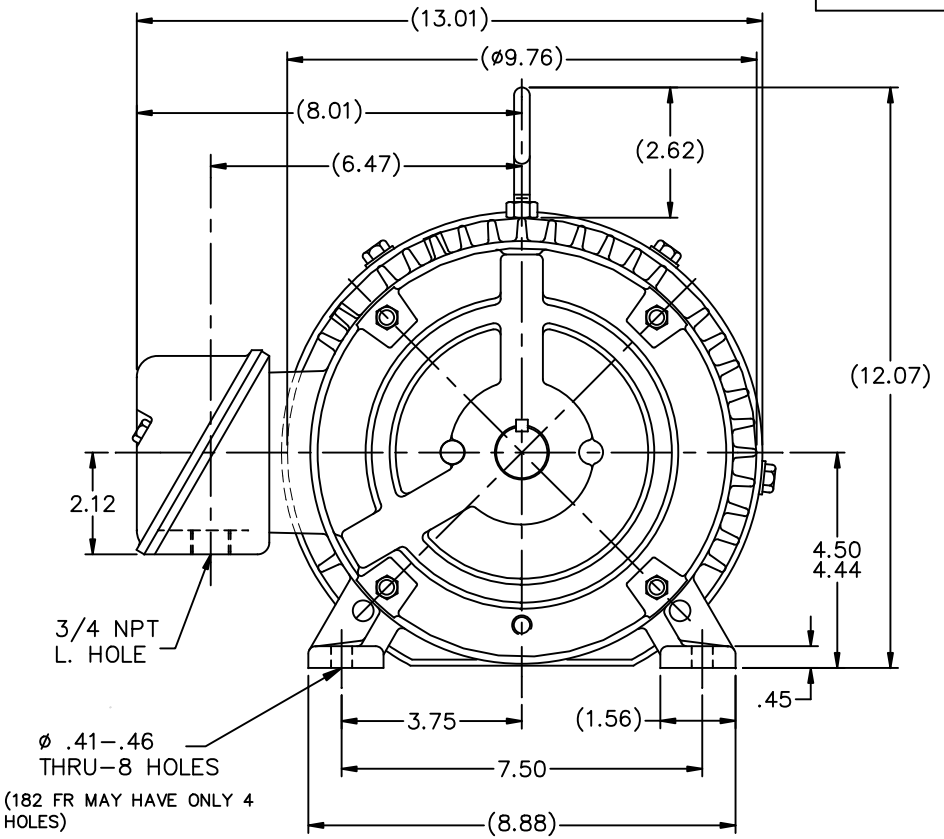

BOX CAN BE MOUNTED ON OPPOSITE SIDE BY REMOVING BRACKETS & TURNING FRAME 180°.

BOX CAN BE ROTATED IN 90° STEPS.

DASH	FR.	C	B	2F	BS
575	182T	15.19	5.50	4.50	2.25
675	184T	16.19	6.50	5.50	2.75

F2 MTG.

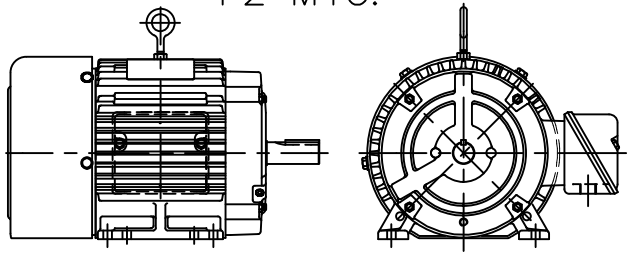

NO.	REVISION	BY & DATE	CHK
3	CHG COND. BOX DIM TO 3.75 WAS 5.00 ECN 18821	TF 01-31-2011	EMH
2	ADDED MOUTING HOLE NOTE CN 26000-581	DRS 01-02-2002	ML
1	NEW DRAWING	NJS 08-30-2000	

TOLERANCES UNLESS SPECIFIED

DEC.	INCHES
.X	±.1
.XX	±.03
.XXX	±.005
.XXXX	±.0005
ANG	±7'30"

Lincoln MOTORS

TITLE OUTLINE
180T FR. – BB – TS – TEFC

MAT'L.

FINISH

CAD FILE ss63661ln

RFP

DIST LB

DRAWN NJS 09-29-2000
CHK ML 08-29-2000
APPD TB 09-30-2000
SCALE 1=4
REF
FMF
PREV

SIZE A | DRAWING NO. SS63661LN | PAGE OF | REV. 3

THIS DRAWING IN DESIGN AND DETAIL IS OUR PROPERTY AND MUST NOT BE USED EXCEPT IN CONNECTION WITH OUR WORK ALL RIGHTS OF DESIGN AND INVENTION ARE RESERVED
THIS IS AN ELECTRONICALLY GENERATED DOCUMENT – DO NOT SCALE THIS PRINT

1/31/2011 2:14:24 PM