SS622289

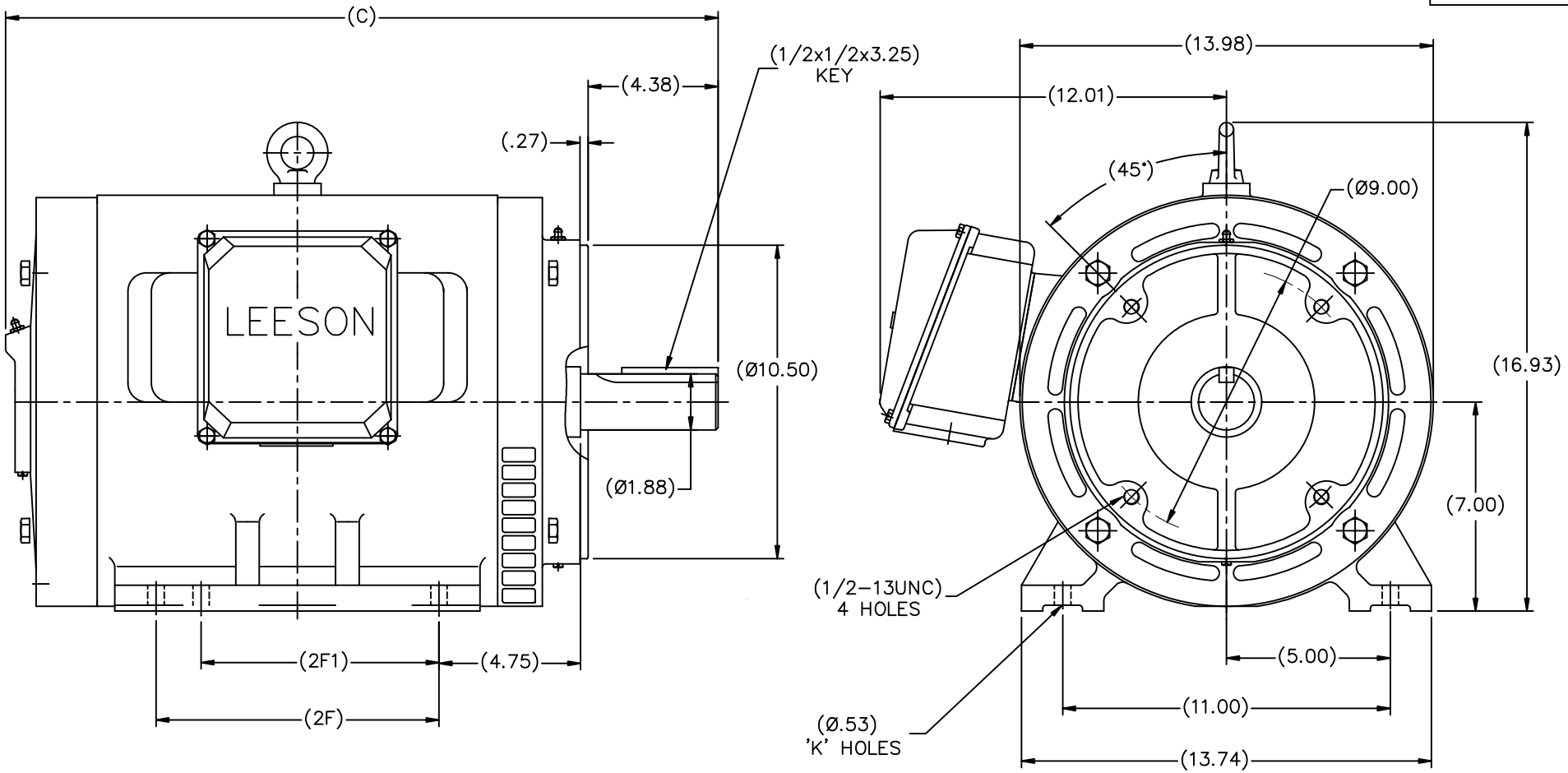

DRAWING NOT TO SCALE

Cat. No.	FRAME	C	2F	2F1	K
170073.60	N284TC-4W2 ODP	24.02	9.50		4
171377.60	N286TC-4W2 ODP	25.51	11.00	9.50	6

NO.	REVISION	BY & DATE	CHK

TOLERANCES UNLESS SPECIFIED

DEC.	INCHES
.X	±.1
.XX	±.03
.XXX	±.005
.XXXX	±.0005
ANG	±7'30"

LEESON — ELECTRIC MOTORS GEARMOTORS AND DRIVES

TITLE OUTLINE
N280TC FR–4W2– C'FACE – ODP

MAT'L.
FINISH
CAD FILE SS622289
RFP
DIST

DRAWN MOL 03–10–2011
CHK MOL 03–10–2011
APPD SB 03–10–2011
SCALE 1=4
REF
FMF
PREV

SIZE B | DRAWING NO. SS622289 | PAGE OF | REV.

THIS DRAWING IN DESIGN AND DETAIL IS OUR PROPERTY AND MUST NOT BE USED EXCEPT IN CONNECTION WITH OUR WORK ALL RIGHTS OF DESIGN AND INVENTION ARE RESERVED
THIS IS AN ELECTRONICALLY GENERATED DOCUMENT – DO NOT SCALE THIS PRINT