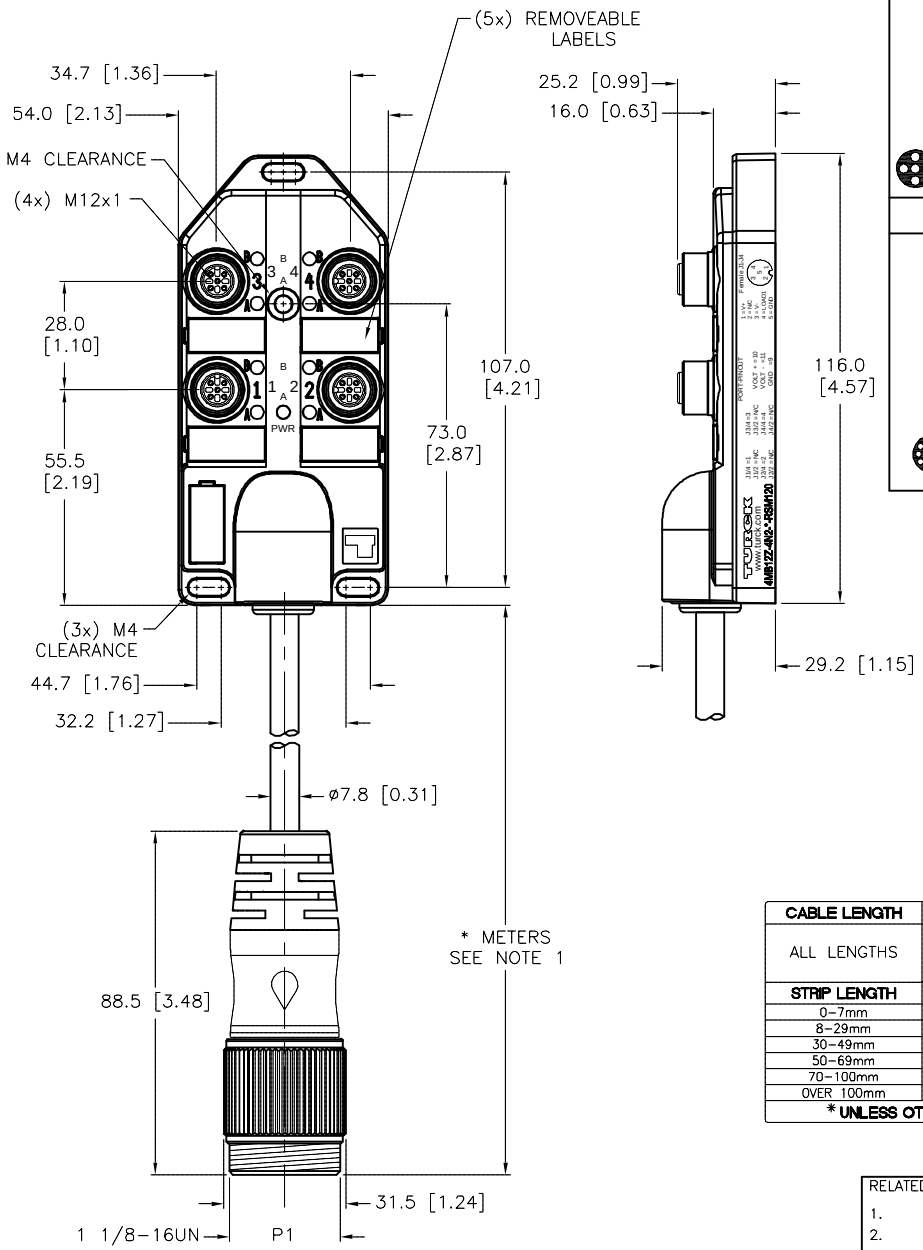

FEMALE END VIEW (J1–J4)

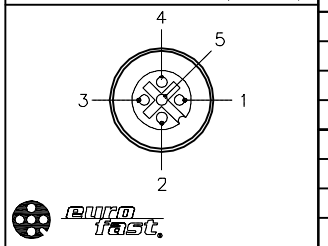

MALE END VIEW (P1)

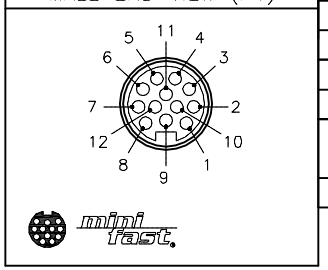

SPECIFICATIONS

NUMBER OF CONDUCTORS [AWG]	7x18 AWG
DRAIN/SHIELD	20 AWG/ALUMINUM–POLYESTER FOIL
CONDUCTOR INSULATION MATERIAL	PVC
OUTER JACKET MATERIAL/COLOR	PVC/YELLOW
HOUSING MATERIAL/COLOR	NYLON/BLACK
RECEPTACLE MATERIAL/PLATING (J1–J4)	BRASS/NICKEL
CONTACT CARRIER MATERIAL	NYLON (J1–J4), TPU (P1)
COUPLING NUT MATERIAL/PLATING (P1)	BRASS/NICKEL
MOLDED HEAD MATERIAL/COLOR (P1)	TPU/YELLOW
CONTACT MATERIAL/PLATING	BRASS/GOLD
O–RING MATERIAL	VITON
OPERATING VOLTAGE [V]	10–30 VDC
OPERATING CURRENT [A]	2.0 AMPS/SIGNAL, 7.0 AMPS TOTAL
PROTECTION CLASS	IP67, ONLY WHEN ALL RECEPTACLES ARE COVERED WITH PLUGS OR CONNECTED
OPERATING TEMPERATURE	–40°C to +85°C (–40°F to +185°F)

WIRING DIAGRAM

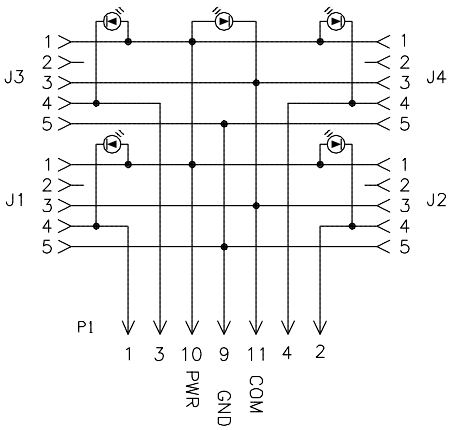

CABLE LENGTH	TOLERANCE *
ALL LENGTHS	+ 4% (OR 50mm) OF LENGTH – 0% (OR 0mm) OF LENGTH WHICHEVER IS GREATER
STRIP LENGTH	**TOLERANCE ***
0–7mm	±0.5mm
8–29mm	±1.0mm
30–49mm	±2.0mm
50–69mm	±3.0mm
70–100mm	±4.0mm
OVER 100mm	±5.0mm
* UNLESS OTHERWISE SPECIFIED	

SOURCE DRAWING - FOR REFERENCE ONLY

NOTES:

1. "*" INDICATES CABLE LENGTHS IN METERS. CONTACT TURCK TO ORDER SPECIFIC LENGTH.

...

REV	DESCRIPTION	BY	DATE	ECO NO.
F	ADD TOP CLICHE PER ECO	KMY	08/26/13	43115

RELATED DOCUMENTS
1.
2.
3.
4.

3RD ANGLE PROJECTION

THIS DRAWING IS CONFIDENTIAL AND THE PROPERTY OF TURCK INC. USE OF THIS DOCUMENT WITHOUT WRITTEN PERMISSION IS PROHIBITED.

TURCK INC
High Technology Sensors and Automation Controls

3000 CAMPUS DRIVE
MINNEAPOLIS, MN 55441
1–800–544–7769
(763) 553–7300
(763) 553–0708 fax
turck.com

MATERIAL: SEE SPECIFICATIONS

FINISH: SEE SPECIFICATIONS

ALL DIMENSIONS DISPLAYED ON THIS DRAWING ARE FOR REFERENCE ONLY

CONTACT TURCK FOR MORE INFORMATION

DRFT: PJ | DATE: 04/12/05
APVD: | SCALE: 1=2.0

UNIT OF MEASUREMENT
MILLIMETER [INCH]
DO NOT SCALE THIS DRAWING

DESCRIPTION: 4MB12Z–4N2–*–RSM120

IDENTIFICATION NO.:

REV: F

FILE: 777007099

SHEET 1 OF 1

Approved 08/30/2013, work order #45553 by J.S.