FEMALE END VIEW

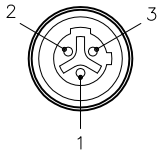

1 = GROUND
2 = (L2) LOAD
3 = (L3) COMMON

microfast

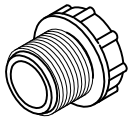

SB-CC CLOSURE
CAPS (2x INCLUDED)

SPECIFICATIONS

HOUWING MATERIAL/COLOR	NYLON/YELLOW
CONTACT MATERIAL/PLATING	BRASS/NICKEL
CONTACT CARRIES/COLOR	NYLON/BLACK
RATED CURRENT [A]	4.0 A PER PORT, 9.0 A TOTAL
RATED VOLTAGE [V]	40 VAC –120 VAC
OUTER JACKET MATERIAL/COLOR	PVC/BLACK
CONDUCTOR INSULATION MATERIAL	PVC
NUMBER OF CONDUCTORS [AWG]	7x18 AWG
DRAIN/SHIELD	20 AWG DRAIN/ALUMINUM POLLYESTER FOIL SHIELD
TEMPERATURE RANGE	–40°C to +105°C (–40°F to +221°F)
PROTECTION CLASS	NEMA 1,3,4,6P AND IP67

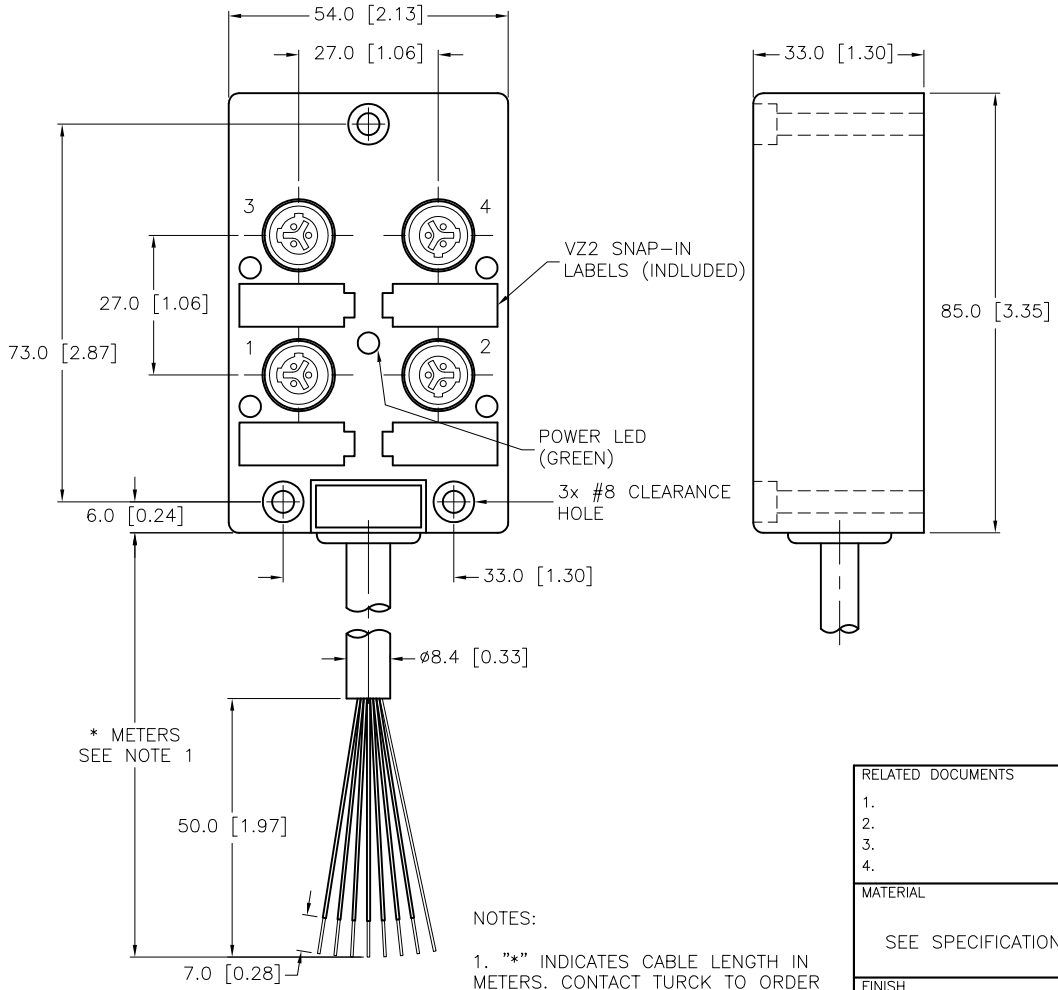

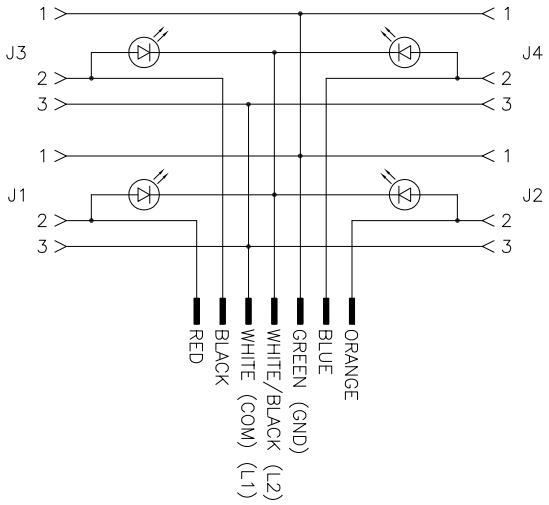

WIRING DIAGRAM

CABLE LENGTH	TOLERANCE
ALL LENGTHS	+ 4% (OR 50mm) OF LENGTH – 0% (OR 0mm) OF LENGTH WHICHEVER IS GREATER
STRIP LENGTH	**TOLERANCE**
0–7mm	±0.5mm
8–29mm	±1.0mm
30–49mm	±2.0mm
50–69mm	±3.0mm
70–100mm	±4.0mm
OVER 100mm	±5.0mm

SOURCE DRAWING - FOR REFERENCE ONLY

NOTES:

1. "*" INDICATES CABLE LENGTH IN METERS. CONTACT TURCK TO ORDER SPECIFIC LENGTHS.

REV	DESCRIPTION	BY	DATE	ECO NO.
B	UPDATE CABLE DIAMETER	RDS	03/28/12	37623

RELATED DOCUMENTS
1.
2.
3.
4.

3RD ANGLE PROJECTION

THIS DRAWING IS CONFIDENTIAL AND THE PROPERTY OF TURCK INC. USE OF THIS DOCUMENT WITHOUT WRITTEN PERMISSION IS PROHIBITED.

TURCK INC
High Technology Sensors and Automation Controls
3000 CAMPUS DRIVE
MINNEAPOLIS, MN 55441
1-800-544-7769
(763) 553-7300
(763) 553-0708 fax
turck.com

MATERIAL: SEE SPECIFICATIONS

FINISH: SEE SPECIFICATIONS

ALL DIMENSIONS DISPLAYED ON THIS DRAWING ARE FOR REFERENCE ONLY

CONTACT TURCK FOR MORE INFORMATION

DRFT: RWC | DATE: 02/14/07
APVD: | SCALE: 1=1.5

UNIT OF MEASUREMENT
MILLIMETER [INCH]
DO NOT SCALE THIS DRAWING

DESCRIPTION: VBKB 40-X5-*

IDENTIFICATION NO.:

REV: B

FILE: 777010005 | SHEET 1 OF 1

Approved 03/29/2012, work order #27039 by A.A.