Female connector M27, 21-pin

Features

- **Female connector M27 with screwable nut**
- **With or without cable (shielded) in different lengths**
- **Cable version: shield is placed onto the connector housing**

Part number

Z 132.001	Female connector M27, 21-pin, less cable
Z 132.003	Female connector M27, 21-pin, 2 m cable
Z 132.005	Female connector M27, 21-pin, 5 m cable
Z 132.007	Female connector M27, 21-pin, 10 m cable

Suitable for

GA240, GA241

Technical data

Voltage supply	<300 V
Core diameter	1.02 ±0.02 mm
Cable length	2 m, 5 m, 10 m (further length upon request)
Cable type	21x0.14 mm²
Bending radius	15 x cable diameter
Outer diameter	8.7 ±0.2 mm
Operating temperature	-25...+105 °C
Material	Cable jacket: PVC grey

Subject to modification in technic and design. Errors and omissions excepted.

Female connector M27, 21-pin

Dimensions

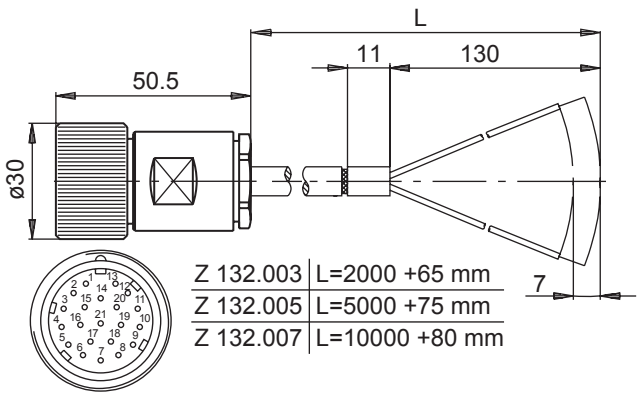

Terminal assignment

Connector	Core colour
Pin 1	violet
Pin 2	white/brown
Pin 3	white/green
Pin 4	white/yellow
Pin 5	white/grey
Pin 6	white/pink
Pin 7	white/blue
Pin 8	white/red
Pin 9	white/black
Pin 10	brown/green
Pin 11	brown/yellow
Pin 12	brown/grey
Pin 13	brown/pink
Pin 14	green/grey
Pin 15	blue
pin 16	blue/yellow
Pin 17	brown
Pin 18	pink
Pin 19	red
Pin 20	red/yellow
Pin 21	yellow

Subject to modification in technic and design. Errors and omissions excepted.